# TAD530GE

4.76 liter, in-line 4 cylinder

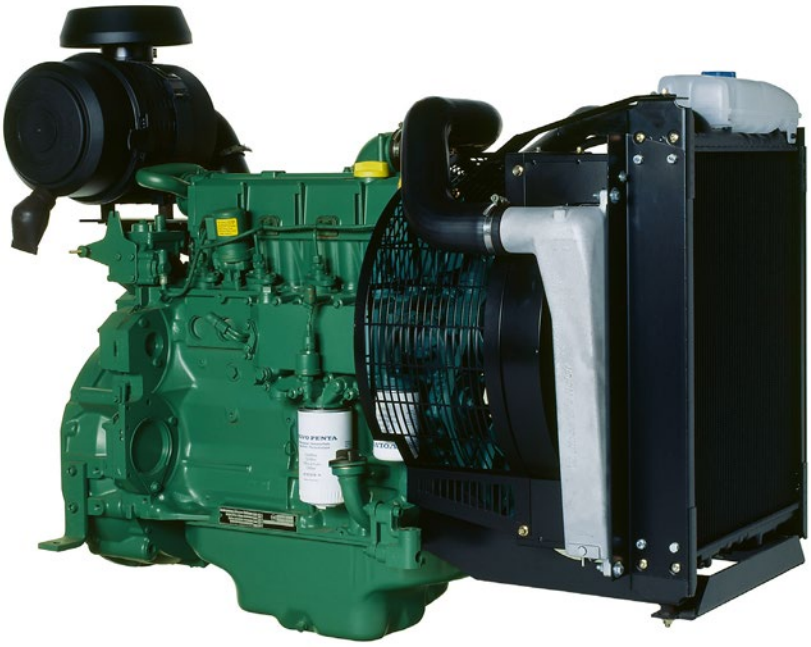

**The TAD530GE is a powerful, reliable and economical Generating Set Diesel Engine.**

**Durability & low noise**
Designed for easiest, fastest and most economical installation. Well-balanced to produce smooth and vibration-free operation with low noise level.
To maintain a controlled working temperature in cylinders and combustion chambers, the engine is equipped with piston cooling. The engine is also fitted with replaceable cylinder liners and valve seats/guides to ensure maximum durability and service life of the engine.

**Low exhaust emission**
The state of the art, high-tech injection and charging system with low internal losses contributes to excellent combustion and low fuel consumption.
The TAD530GE is certified for EU Stage 2 exhaust emission regulations.

**Easy service & maintenance**
Easily accessible service and maintenance points contribute to the ease of service of the engine.

- **Mechanical or electronic governor with CAN-bus communication**
- **Compact design**
- **High power to weight ratio**
- **Emission compliant**
- **Noise optimized engine design**
- **A wide selection of optional equipment and power settings**

## 50 Hz/1500 rpm

| Prime power | | | Standby power | | |
|---|---|---|---|---|---|
| kWm | kWe | kVa | kWm | kWe | kVa |
| 75 | 68 | 85 | 83 | 76 | 94 |

## 60 Hz/1800 rpm

| Prime power | | | Standby power | | | Gen.eff. |
|---|---|---|---|---|---|---|
| kWm | kWe | kVa | kWm | kWe | kVa | % |
| 76 | 70 | 88 | 85 | 77 | 97 | 91 |

**kWm** = kiloWatt mechanical, net with fan*; **kWe** = kiloWatt electrical = kWm x Generator eff.; **kVA** = kiloVoltAmpere calculations based on a 0.8 power factor = kWe / 0.8
**1 kW** = 1 hp x 1.36; **1 hp** = 1 kW x 0.7355
*) According to technical data

# TAD530GE

4.76 liter, in-line 4 cylinder

## Technical Data

### General

| | |
|---|---|
| Engine designation | TAD530GE |
| No. of cylinders and configuration | in-line 4 |
| Method of operation | 4-stroke |
| Bore, mm (in.) | 108 (4.25) |
| Stroke, mm (in.) | 130 (5.12) |
| Displacement, l (in³) | 4.76 (290) |
| Compression ratio | 18:1 |
| Dry weight, kg (lb) | 575 (1268) |
| Wet weight, kg (lb) | 606 (1336) |

| Performance | 1500 rpm | 1800 rpm |
|---|---|---|
| with fan, kW (hp) at: | | |
| Prime Power | 75 (102) | 76 (104) |
| Standby Power | 83 (113) | 85 (115) |

| Lubrication system | 1500 rpm | 1800 rpm |
|---|---|---|
| Oil consumption, liter/h (US gal/h) at: | | |
| Prime Power | 0.08 (0.021) | 0.08 (0.021) |
| Standby Power | 0.08 (0.021) | 0.08 (0.021) |
| Oil system capacity incl filters, liter | 13 | |

| Fuel system | 1500 rpm | 1800 rpm |
|---|---|---|
| Specific fuel consumption at: | | |
| Prime Power, g/kWh (lb/hph) | | |
| 25 % | 276 (0.447) | 302 (0.490) |
| 50 % | 231 (0.374) | 240 (0.389) |
| 75 % | 219 (0.355) | 223 (0.361) |
| 100 % | 217 (0.352) | 219 (0.355) |
| Standby Power, g/kWh (lb/hph) | | |
| 25 % | 263 (0.426) | 286 (0.464) |
| 50 % | 226 (0.366) | 235 (0.381) |
| 75 % | 218 (0.353) | 222 (0.360) |
| 100 % | 218 (0.353) | 219 (0.355) |

## Dimensions TAD530GE

Not for installation

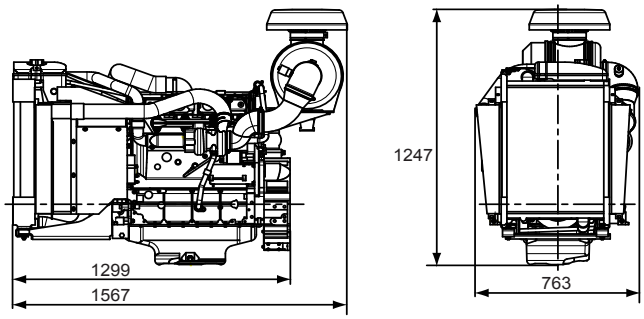


## Technical description

### Engine and block

- Optimized cast iron cylinder block with optimum distribution of forces
- Piston cooling for low piston temperature and reduced ring temperature
- Drop forged steel connecting rods
- Crankshaft hardened bearing surfaces and fillets for moderate load on main and big-end bearings
- Keystone top compression rings for long service life
- Replaceable valve guides and valve seats
- Three PTO positions at flywheel end
- Lift eyelets
- Flywheel housing with connection acc. to SAE 2 and SAE 3
- Flywheel for flexible coupling and friction clutch
- Transport brackets

### Lubrication system

- Full flow disposable spin-on oil filter, for extra high filtration
- Rotary displacement oil pump driven by the crankshaft
- Deep centre oil sump, 30° inclination
- Oil filler on top
- Oil dipstick, short in front
- Integrated full flow oil cooler, side-mounted

### Fuel system

- Six hole fuel injection nozzles
- Electronic governor with smoke limiter function
- Washable fuel prefilter with water separator
- Rotary low-pressure fuel pump
- Fine fuel filter of disposable type

### Intake and exhaust system

- Connection flange for exhaust line
- Turbo charger, centre low with exhaust flange
- Closed crankcase ventilation
- Heater flange in charge air inlet (without power relay)

### Cooling system

- Belt driven, maintenance-free coolant pump with high degree of efficiency
- Efficient cooling with accurate coolant control through a water distribution duct in the cylinder block
- Reliable thermostat with minimum pressure drop
- Cooling water pipe, inlet and outlet
- Fan hub
- Fan on separate bracket 292mm above crankshaft

### Electrical system

- 12 V electrical system
- Alternator 1x55A / 12V, low left
- Starter motor, 3.1kW / 12 V, single pole
- ECU (without high altitude sensor) control and monitoring of oil pressure, coolant temperature, coolant level, charge air pressure, engine rpm and fuel temperature compensation
- Engine wiring

### Rating guidelines

PRIME POWER rating corresponds to ISO Standard Power for continuous operation. It is applicable for supplying electrical power at variable load for an unlimited number of hours instead of commercially purchased power. A10 % overload capability for govering purpose is available for this rating.

STAND-BY POWER rating corresponds to ISO Standard Fuel Stop Power. It is applicable for supplying stand-by electrical power at variable load in areas with well established electrical networks in the event of normal utility power failure. No overload capability is available for this rating.

### Power standards

The engine performance corresponds to ISO 3046, BS 5514 and DIN 6271. The technical data applies to an engine without cooling fan and operating on a fuel with calorific value of 42.7 MJ / kg (18360 BTU/lb) and a density of 0.84 kg/liter (7.01 lb/US gal), also where this involves a deviation from the standards. Power output guaranteed within 0 to +2% att rated ambient conditions at delivery. Ratings are based on ISO 8528. Engine speed governing in accordance with ISO 8528-5 G3.

Please contact your local Volvo Penta dealer for further information. Please note that products illustrated may differ from production models. Not all models and accessories are available in all markets, and standard equipment may vary between different markets. Every effort has been made to ensure that facts and figures are correct at the time of publication. However, Volvo Penta reserves the right to make changes without prior notice at any time.

English 02-2020 © 2020 AB Volvo Penta.

LOTUS® POWER GENERATOR SETS

VOLVO PENTA